慈溪市万捷电子有限公司
CIXI WANJIE ELECTRONIC CO., LTD

REVISION RECORD				
REV.	DESCRIPTION	ECN No.	APPROVED	DATE

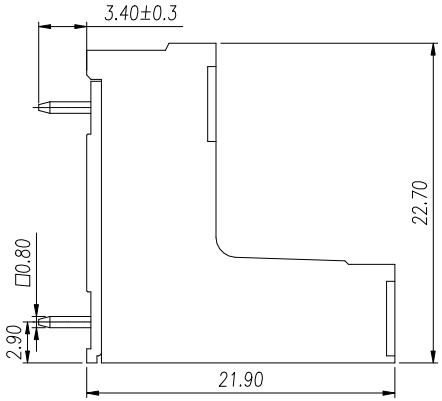

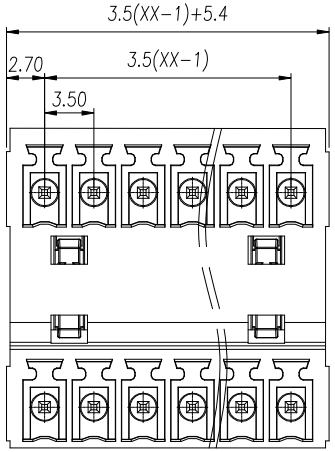

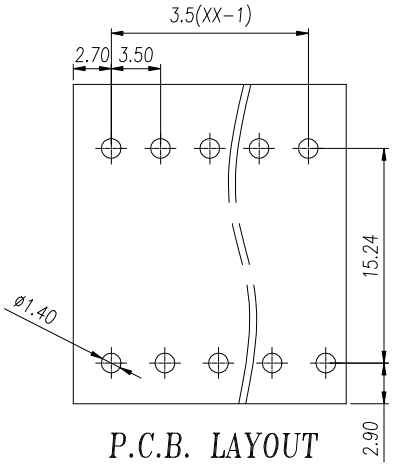

P.C.B. LAYOUT

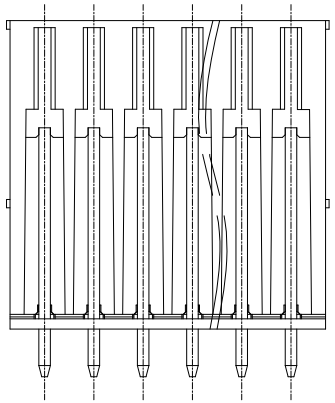

UL/CUL 技术参数 UL/CUL Technical Data			
等 级 Use Group	B	C	D
额定电压 Rated Voltage [V]	300	-	300
额定电流 Rated Current [A]	8	-	8
接线范围 Wire Range 单/多芯线 Solid/Stranded [AWG]	-		
耐电压 Withstanding Voltage	1600V/1Min		
IEC 技术参数 IEC Technical Data	IEC61984		
过电压类别 Overvoltage Category	III	III	II
污染等级 Contamination Class	3	2	2
额定电压 Rated Voltage [V]	160	160	250
额定电流 Rated Current [A]	7	7	7
额定冲击电压 Impulse withstand voltage [KV]	2.5	2.5	2.5
导线截面积 Conductor cross section 硬质/柔性导线 Solid/ flexible [mm²]	-		
材 料 Material			
绝缘材料 Insulation Material	PA66		
阻燃等级 Imflammability	UL94V-0		
导体材料 Contactor Material	铜合金 Copper alloy		
导体表面镀层 Contactive Coating	镀锡 Sn Plated		
一般参数 Other Data			
间距 Pitch /极数 Poles [mm] / [P]	3.5 / 2*2~2*24		
剥线长度 Stripping Length [mm]	-		
螺丝 Screw/扭矩 Torque(Max) [N.m]	-		
工作温度 Operating temperature [°C]	-40~105		
焊锡温度 Soldering temperature	260°C/5S		
引针尺寸 Pin Dimensions [mm]	0.8*0.8		
PCB板孔径 PCB Hole Diameter [mm]	Ø1.4		

linear dimension(Tolerances Standard GB/T 14486-2008)								—	▱	⊥
variable range	to 6	over 6 to 10	over 10 to 30	over 30 to 60	over 60 to 100	over 100 to 160	over 160 to	to 10	over 10 to 100	over 100 to
tolerance	±0.20	±0.30	±0.50	±0.70	±1.00	±1.30	±1.60	0.10	0.30	0.60

单位 / UNITS	mm	尺寸 / SIZE	A4	比例 / SCALE	2:1	第三视角/THIRD ANGLE PROJECTION	版本 / REV	V0
慈溪市万捷电子有限公司 CIXI WANJIE ELECTRONIC CO., LTD						名称 / TITLE	WJ15EDGVT-3.5-2*XXP-1YY-00A	